Source: City Manager

Agenda Item No: Supplemental Information

To: City Council
From: City Manager and Staff

Council Meeting Date: Sep 16, 2013

Re: EEC recommendations for residential building codes corrected letter- Supplemental information for Council

EXECUTIVE SUMMARY:

An incorrect letter from the Environment and Energy Commission was mistakenly introduced at the September 3 , 2013 City Council meeting. The introduced letter was submitted as supplemental information for Agenda items B239-13 through B246-13. The corrected letter, dated April 17, 2013 is attached here as supplemental information.

DISCUSSION:

The Environment and Energy Commission (EEC) was requested by City Council to review changes to the building code in regards to energy efficiency. The commission originally submitted their recommendations to City staff in a letter dated January 17, 2013. Upon further review of their recommendations, the EEC re-submitted their letter to staff and City Council on April 17, 2013. The January 17, 2013 letter to staff was mistakenly submitted as supplemental information to Agenda items B239-13 through B246-13 at the September 3, 2013 City Council meeting.

The recommendations from the April 17, 2013 letter are the recommendations Council heard at their June 17 pre-Council meeting. Those recommendations are to adopt the 2012 energy code as written or accept the three compromises as recommended by the EEC. Those compromises are:

1. The amount of attic insulation
2. The amount of wall insulation
3. Perimeter foundation insulation

Staff apologizes for the confusion and have attached the correct letter, which has been seen by the City Council before, for clarification.

FISCAL IMPACT:

None

VISION IMPACT:
http://www.gocolumbiamo.com/Council/Meetings/visionimpact.php

By adopting the 2012 energy code, newer homes will be more energy efficient

SUGGESTED COUNCIL ACTIONS:

The Environment and Energy Commission requests that Council amend the proposed changes to building codes with the recommendations from the EEC.

FISCAL and VISION NOTES:					
City Fiscal Impact Enter all that apply		**Program Impact**		**Mandates**	
City's current net FY cost	$0.00	New Program/ Agency?		Federal or State mandated?	
Amount of funds already appropriated	$0.00	Duplicates/Expands an existing program?		**Vision Implementation impact**	
Amount of budget amendment needed	$0.00	Fiscal Impact on any local political subdivision?		Enter all that apply: Refer to Web site	
Estimated 2 year net costs:		**Resources Required**		Vision Impact?	Choose One
One Time	$0.00	Requires add'l FTE Personnel?		Primary Vision, Strategy and/or Goal Item #	
Operating/ Ongoing	$0.00	Requires add'l facilities?		Secondary Vision, Strategy and/or Goal Item #	
		Requires add'l capital equipment?		Fiscal year implementation Task #	

ENVIRONMENT & ENERGY COMMISSION

City of Columbia & County of Boone

City Hall, Conference Room 1A

April 17, 2013

Mayor McDavid and Council Members,

The Environment & Energy Commission has reviewed the 2012 Energy Code (Chapter 11 of the International Residential Code), and the recommendations of the Building Code Commission. The BCCC has done extensive research into the energy conservation sections of the residential code, and deserves recognition for this effort. The recommendations of the EEC are as follows:

Insulation of hot water piping: The EEC agrees with the BCCC's proposal of eliminating hot water insulation requirements except in the case of hot water circulating pump piping.

Wood frame wall insulation: The 2012 Energy Code requires R20 or R13+5 (R13 batt and R5 cladding). We agree with the BCCC that this new insulation requirement be kept in force. The BCCC has proposed an exception allowing high density batts to substitute for exterior continuous insulation cladding, however this does not meet the letter of *R402.1.3 U-Factor Alternative*. The EEC does not agree with the BCCC proposal allowing high density batts to substitute for continuous insulation cladding.

Termite exemption for slab-on-grade and foundation insulation: The EEC recommends the retention of section *R402.2.9 Slab-on-grade-floor* insulation requirement in the 2012 International Energy Conservation Code. We suggest using standard termite barrier details which has been allowed as an option by City Authorities for some time. This is not in agreement with the BCCC recommendations for an exemption.

Ceiling or Attic R-value: The 2012 Code recommends an increase in Attic insulation from R-38 to R-49, and in the case of an "Energy Band" truss, reduction to R-38 is allowed. The EEC Recommends that this requirement, which may result in reduced mechanical equipment size if properly implemented, will be cost effective. Contractors using proper "Manual J" Calculations will reduce equipment size, thus reduce overall building cost and energy use compared to the old Code. This reduced HVAC equipment size can directly reduce electric utility demand charges, reaping benefits to the City Utility as well as to the consumer. This is not in agreement with BCCC recommendations which propose to keep 2009 insulation requirements.

Air leakage: The 2012 Code requires a blower door test on all new houses to determine air leakage. The EEC would agree with BCCC that a relaxed standard which requires a visual inspection of air leakage control measures during construction is feasible. The blower door test should be allowed as an option at the discretion of the Building Inspector in questionable or disputed cases.

Duct leakage: The 2012 Code requires a duct pressure test on all new houses to determine duct leakage. Mechanical contractors are more aware of leakage requirements, and testimony shows they are taking care to seal ductwork. The EEC would agree with the BCCC that a relaxed standard which requires a visual inspection of duct leakage control measures during construction be allowed. The duct pressure test should be allowed as an option at the discretion of the Building Inspector in questionable or disputed cases.

Outdoor air duct: The EEC agrees with the BCCC recommendation of a single outside air duct, with insect screen and damper, routed to the furnace return air intake to satisfy Section R303 and M1507 Mechanical Ventilation requirements. This duct should be 4" for houses less than 1500 square feet, 6" for houses less than 2400 square feet, and 8" for larger houses. If there are multiple furnaces, the requirements may be applied to the area served by the furnace, or to one of the multiple furnaces as long as the furnace is properly sized to handle the additional heating or cooling load imposed by the outside air. The duct should be placed as to discharge into the return air filter, to reduce allergens or dust from outdoors.

Building cavities as return air The EEC agrees with the BCCC that building cavities may be used as return air cavities without full duct lining, as long as leakage to outside air, attics, or unconditioned spaces is prevented by visually inspection.

High efficacy lamps: The EEC agrees with the BCCC recommending that the 2012 requirement that 75 percent of the *lamps* in light fixtures be high efficacy type, be changed to read 75 percent of the *fixtures shall* be high efficacy. This allows a few multiple bulb fixtures, such as candelabras, to be conventional bulbs, while retaining the requirement for high efficacy bulbs in most areas.

Programmable thermostats: The 2012 Code specifies that the initial heating setpoint shall be 70F and the cooling setpoint be 78F. The EEC agrees with the BCCC in recommending that this paragraph be changed from *shall* to *should,* which makes the requirement non-mandatory.

Respectfully Yours,

By: _____

Signature

Lawrence Lile,

Vice Chair and Acting Chair

Environment and Energy Commission

Introduced by _____

First Reading _____ Second Reading _____

Ordinance No. _____ Council Bill No. _____B 239-13_____

AN ORDINANCE

repealing Article II of Chapter 6 of the City Code relating to the 2009 Edition of the International Building Code and enacting in lieu thereof a new Article II adopting the 2012 Edition of the International Building Code; and fixing the time when this ordinance shall become effective.

BE IT ORDAINED BY THE COUNCIL OF THE CITY OF COLUMBIA, MISSOURI, AS FOLLOWS:

SECTION 1. Article II of Chapter 6 of the Code of Ordinances, City of Columbia, Missouri, relating to the 2009 Edition of the International Building Code, is hereby repealed and in lieu thereof a new Article II, relating to the 2012 Edition of the International Building Code, is hereby enacted reading in words and figures as follows:

CHAPTER 6. BUILDINGS AND BUILDING REGULATIONS

. . .

ARTICLE II. BUILDING CODE

Sec. 6-16. Adopted.

The 2012 Edition of the International Building Code, published by the International Code Council, Inc., including Appendices C, E, F, I and J, one copy of which has been on file with the city clerk for a period of ninety (90) days prior to the adoption of this article, is hereby adopted by reference and made a part of the Code of Ordinances, City of Columbia, Missouri as fully as if set forth in its entirety. At least one (1) copy of the 2012 Edition of the International Building Code shall remain on file in the office of the city clerk and shall be kept available for public use, inspection and examination.

Sec. 6-17. - Amendments.

The code adopted by this article is hereby amended by substituting the following sections in lieu of those sections with corresponding numbers in the code, or, where there

is no corresponding section in the code, the following sections shall be enacted as additions to the code:

101.1 Title: These regulations shall be known as the Building Code of Columbia, Missouri, hereinafter referred to as "this code."

101.2 Scope. Add the following exception: Where the adopted building code references means and methods of construction, that part shall be stricken.

101.2.2: Appendices C, E, F, and I are hereby adopted as published. Appendix J is hereby adopted as amended.

Appendix J section J106.1 Maximum slope; is hereby amended to read as: The slope of cut and fill surfaces shall be no steeper than is safe for the intended use, and shall be no steeper than 3 horizontal to 1 vertical (33 percent) unless the applicant furnishes a geotechnical report justifying a steeper slope.

> Exceptions: Number 1 is deleted in its entirety and exception number 2 will now be listed as exception number 1.

Appendix J section J107.6 Maximum slope; is hereby amended to read as: The slope of fill surfaces shall be no steeper than is safe for the intended use. Fill slopes steeper than 3 horizontal to 1 vertical (33 percent) shall be justified by a geotechnical report or engineering data.

101.4 Referenced codes: Add the following additional sentence to this paragraph: All references to the International Existing Building Code are deleted.

103.0 Division of Building and Site Development

103.1 Director: The administration and enforcement of this code shall be the duty of the director of the department of community development, who is hereby authorized to take such action as may be reasonably necessary to enforce the provisions of this code. Such persons may be appointed and authorized as assistants or representatives of the director as may be necessary to carry out the provisions of this code.

103.2 Appointment: Delete

103.4 Restriction of employees: An employee connected with the Department of Community Development - Division of Building and Site Development shall not be engaged in or directly or indirectly connected with the furnishing of labor, materials or appliances for the construction, alteration or maintenance of a building, or the preparation of plans or of specifications therefore, unless such employee is the owner of the building; nor shall such

employee engage in any work which conflicts with such employee's official duties or with the interest of the department.

104.7 Department records: An official record shall be kept of all business and activities of the division specified in the provisions of this code, and all such records shall be open to public inspection at all appropriate times and according to reasonable rules to maintain the integrity and security of such records.

104.8 Liability: Any officer or employee charged with the enforcement of this code, while acting on behalf of the city, shall not thereby render such individual liable personally, and is hereby relieved from all personal liability for any damage accruing to persons or property as a result of any act performed in the discharge of official duties. Any suit instituted against any officer or employee because of an act performed by that officer or employee in the lawful discharge of duties and under the provisions of this code shall be defended by the legal representative of the jurisdiction until the final termination of the proceedings. The officer or employee shall not be liable for costs in any action, suit or proceeding that is instituted pursuant to the provisions of this code; and any officer or employee acting within the scope of employment and in good faith and without malice, shall be free from liability for acts performed under any of its provisions or by reason of any act or omission in the performance of official duties in connection therewith. Nothing contained herein shall be deemed a waiver of the immunities and protection afforded to the city or officers and employees pursuant to state and federal law.

104.10.1 - Deleted.

107.1 General: Add the following paragraph and list after exception paragraph: The application for the permit shall be accompanied by not less than two (2) sets of construction documents drawn to scale, with sufficient clarity and detail dimensions to show the nature and character of the work to be performed including general construction, special inspections, construction observation programs, structural, mechanical and electrical work and calculations. Each sheet of each set of plans, each set of specifications, calculations and other data shall be legally sealed by a registered design professional as required by the State of Missouri statutes. Where special conditions exist, the building official is authorized to require additional documents, information or calculations that are to be prepared by a registered design professional licensed in the State of Missouri. Legally sealed may include a "wet seal" with original signatures or other approved methods.

Buildings or structures exempt from these requirements are:

a. One-family dwellings.

b. Two-family dwellings.

c. Commercial or industrial buildings not more than twelve hundred (1,200) square feet and which provide for the employment, sleeping, assembly, housing or feeding of less than ten (10) persons.

d. Any structure containing less than twenty thousand (20,000) cubic feet, except as provided in b. or c. above.

e. A building or structure used exclusively for farm purposes.

107.2.5 Site plan: There shall also be filed a site plan showing to scale the size and location of all the new construction and all existing structures on the site, distances from lot lines, the established street grades and the proposed finished grades; and it shall be drawn in accordance with an accurate boundary line survey and certifying as to date survey was made. In the case of demolition, the site plan shall show all construction to be demolished and the location and size of all existing structures and construction that are to remain on the site or plot.

Exemption: One- and two-family dwellings are not required to show proposed finished grades.

107.2.5.1 Delete in its entirety

107.2.5.2 Private sewage disposal system: The site plan shall indicate the location of a private sewage disposal system where a public sewer is not available. All technical data and soil data required by the State of Missouri Regulation 19 CSR 20-3.060, Minimum Construction Standards for On-Site Sewage Disposal Systems, shall be submitted with the site plan.

107.2.5.3 Location of utility easements to be shown on building permit applications: All applications for building permits shall clearly show the location of all utility easements and all structures, lines or pipes used by the utility and located within such utility easements. No building permit shall be issued with respect to a structure to be located on, over, under or within a utility easement unless and until such time as the city council:

A. Shall determine by ordinance that the structure as proposed contains adequate protection to insure:

1. Full ingress and egress to all portions of the easement insuring full and safe maintenance, construction and reconstruction of all utility structures located or which could be located within the easement; and

2. Full use of the easement for utility purposes without danger to public property and to the health, safety and welfare of the citizens of the city.

B. Shall receive adequate assurances in the form of a bond or a waiver of claim and indemnity agreement on a form approved by the city counselor sufficient to protect the city and its citizens from loss.

Provided, however, that in lieu of the requirements of subparagraphs A and B above, an applicant shall have the option of relocating any and all utility improvements and utility easements at applicant's own expense and upon the written approval of the owner of the improvements and utility easements.

108.4 Termination of approval: The building official is hereby authorized to terminate such permit for a temporary structure and to order the demolition of any such construction at the official's discretion, or as directed by a decision of the building construction codes commission.

109.1 General: A permit to begin work for new construction, alteration, removal, demolition or other building operation shall not be issued until the fees prescribed in this section shall have been paid to the Division of Building and Site Development or other authorized agency of the jurisdiction, nor shall an amendment to a permit necessitating an additional fee be approved until the additional fee shall have been paid.

109.2 Permit fees: Permit fees for new construction, alterations, and additions shall be based upon the value of the construction as determined by the Division of Building and Site Development using the latest August publication of the International Code Council Building Valuation Data which shall be effective as of October 1st of the year it is published. Remodeling, alterations and repair valuations shall be computed using fifty (50) percent of the value for new construction.

The values determined in accordance with the above is for determining the building permit fee and is not intended to determine actual construction costs. The building permit fee shall be: $2.25 per thousand dollars of value (minimum fee $21.60)

All construction

Footing & Foundation Only	-	The permit fee to do only footing and foundation for a building or structure shall be $54.00. This fee is in addition to the normal building permit fee and is not refundable or credited to the normal building permit fee.
Plan Review Fee	-	Fifty (50) percent of building permit fee. This fee is imposed whenever plans are required.

Failed inspection Fee	-	$35.00 for each failed inspection $75.00 for each failed re-inspection

Exemption: Residential storage structures under 120 square feet shall be exempt from permit fees.

109.2.1 Moving of buildings: The fee for a building permit for the removal of a building or structure from one lot to another or to a new location on the same lot shall be fifty (50) percent of the fee for new buildings with a minimum fee of forty-five dollars ($45.00). There shall also be an inspection fee of twenty-five dollars ($25.00) prior to moving the building or structure.

109.2.2 Demolition: The fee for a permit for the demolition of a building or structure shall be: residential – fifty dollars ($50.00), commercial – one hundred dollars ($100.00).

109.2.3 Signs: The fee for signs, billboards and other display structures for which permits are required under the provisions of the Sign Regulations shall be forty-five dollars ($45.00) for not more than fifty (50) square feet. For each sign over fifty (50) square feet – forty-five dollars ($45.00) plus fifteen cents ($0.15) for each square foot over fifty (50).

109.4 Work commencing before permit issuance: Where work for which a permit is required by this code is started prior to obtaining the permit, the fees specified above shall be doubled. If any person, firm or corporation commits a second offense by starting work without a permit, the person shall pay three times the customary fee in order to obtain the necessary permit. Any offense shall subject the offender to prosecution under Section 114 of this code.

If any person, firm or corporation fails to obtain the necessary permit(s) within five (5) days after being notified in writing to do so by the building official, the person shall pay in addition to the fee as provided above, the sum of five dollars ($5.00) for each day in excess of the five (5) days that pass before the person obtains the necessary permit. The payment of any or several of the above-stated fees shall not relieve any person from fully complying with the requirements of this code in the execution of the work nor from any penalties prescribed herein.

109.5 Related fees: The payment of the fee for the construction, alteration, removal, or demolition and for all work done in connection with or concurrently with the work contemplated by a building permit, shall not relieve the applicant or holder of the permit from the payment of other fees that are prescribed by law or ordinance for water taps, sewer connections, electrical permits, erection of signs and display structures, marquees or other appurtenant structures, or fees for inspections, certificates of use and occupancy or other privileges or requirements, both within and without the jurisdiction of the Community Development Department.

109.6 Refunds: The building official shall authorize the refunding of fees as follows:

1. The full amount of any fee paid hereunder which was erroneously paid or collected.

2. Not more than seventy five (75) percent of the permit fee paid when no work has been done under a permit issued in accordance with this code.

The building official shall not authorize the refunding of any fee paid, except upon written application filed by the original permittee not later than one hundred eighty (180) days after the date of fee payment.

111.3 Temporary Occupancy: A bond must be provided to receive a Temporary Certificate of Occupancy. The building official will establish a bond amount based on the work remaining for completion of the structure and the site. The building owner, contractor, or design professional in responsible charge shall provide information, including a completion date for all building and site work remaining for completion. The building official has the authority to approve or deny any request for a Temporary Certificate of Occupancy. The building official has the authority to set the final amount of the bond, or the option to waive the bond upon receiving written request and documentation for file from the building owner, contractor, or design professional in responsible charge.

113 BUILDING CONSTRUCTION CODES COMMISSION

113.1 Creation of the commission: There is hereby created a building construction codes commission consisting of ten (10) members and ten (10) alternates.

113.1.1 Membership of the commission: The commission shall consist of ten (10) members appointed by the city council. The first three (3) members appointed shall serve for three (3) years, the second three (3) members appointed shall serve for two (2) years and the final four (4) members shall serve for one year. Thereafter, each new member shall be appointed for three (3) years or until a successor has been appointed. Appointments to fill vacancies shall be for unexpired terms only.

113.1.2 Qualifications of commission members: The commission shall be composed of individuals with the following qualifications:

1. Professional engineer (experience in electrical/mechanical)

2. Professional engineer (experience in structural/civil)

3. Master plumber

4. Licensed electrician or electrical contractor

5. Major contractor or superintendent

6. Minor contractor or home builder

7. Person experienced in fire prevention

8. Registered architect

9. Layperson

10. Residential rental property owner

113.1.3 Alternates: Whenever possible, the city council shall appoint an alternate commissioner of equal qualifications for each regular commissioner appointed. The alternate shall serve a term contemporaneous to the term of the regular commissioner of equal qualifications.

113.1.4 Commission chair: The board shall select one of its members to serve as chair and the building official shall designate a clerk from the department to serve as secretary to the board, who shall keep a detailed record of all proceedings on file in the Community Development Department.

113.1.5 Meetings: Upon the request of any commissioner or whenever there is any business to transact before the commission, the commission shall meet once each month.

113.1.6 Absence of commissioners: During the absence of a commissioner, the designated alternate shall sit on the commission. Any other alternate may sit on the commission for a member whose alternate is not present as directed by the chairman. The Secretary of the Board shall call alternates in accordance with the policies of the Board. While sitting on the commission, the alternate shall have the full power and authority of the regular commissioner. The chair of the commission is authorized to excuse any member from attendance at a commission meeting; provided that the member requested to be excused before the meeting. Any member who is absent, without being excused, from twenty-five (25) percent of the regular commission meetings held in a calendar year shall automatically forfeit the office. Any member who is absent, without being excused, from three (3) consecutive regular meetings shall automatically forfeit the office. It shall be the duty of the chair to promptly notify the city council of the vacancy. The city council, upon such notice, shall appoint a new commissioner with equal qualifications to fill the remainder of the original term.

113.2 Application for appeals: The owner of a building or structure or any person directly affected by a decision of the building official or fire marshal may appeal to the building construction codes commission from a decision of the official refusing to grant a

modification, variance or waiver to the provisions of the Building, Electrical, Plumbing, Mechanical, Fire Prevention, One and Two Family Dwelling or Property Maintenance codes covering the manner of construction or materials to be used in the construction, erection, alteration, or repair of a building or structure. Application for appeal may be made when it is claimed that the true intent of the code or the rules legally adopted thereunder have been incorrectly interpreted, the provisions of the code do not fully apply, an equally good or better form of construction can be used, or undue hardship is created by strict compliance with the letter of the code but has no significant effect on the health, safety and welfare of the public or any individual. A fee of one hundred twenty dollars ($120.00) must be submitted with the application. The fee shall be refunded to the applicant if the applicant appears at the commission meeting at which the appeal is scheduled to be heard.

113.2.1 Notice of meeting: The commission shall meet upon notice of the chairman within ten (10) days of filing of an appeal or at stated periodic meetings if warranted by the volume of work.

113.2.2 Public hearing: All hearings and meetings of the commission shall be public. All hearings considering an appeal of a ruling of the building official or fire marshal shall be on the record and be recorded by a person qualified as a court reporter. At the appeal hearing, the appellant, and appellant's representative, the official of the jurisdiction and any other person whose interests may be affected by the matter on appeal, shall be given an opportunity to be heard. All testimony on matters on appeal shall be given under oath.

113.2.3 Adjourned meeting: When seven (7) qualified commissioners are not present to consider a specific appeal, either the appellant, the building official or their representative may request a postponement of the hearing.

113.2.4 Action of the commission: The commission shall affirm, modify or reverse the decision of the building official or fire marshal by a concurring vote of the majority of its members. Every action of the commission shall be by motion or resolution and the commission's decision shall be evidenced by certified copies which shall be furnished to the appellant and to the building official.

113.2.5 Exemption of members: A member of the commission shall not vote on any question in which that member is engaged as contractor, material dealer, or in the preparation of plans or specifications, or in which the board member has any personal interest.

113.2.6 Determining vote: Failure to secure six (6) concurring votes shall be deemed a confirmation of the decision of the building official except that the appellant shall be entitled to further hearing before a full commission if there were not ten qualified members present when the vote was taken.

113.2.7 Enforcement of decision: The building official shall take immediate action in accordance with the decision of the board.

113.3 Court review: Any person aggrieved by a decision of the commission may appeal to the circuit court as provided by Chapter 536 of the Revised Statutes of Missouri.

113.4 Code revisions: The commission shall, at the request of the city council, review the Building and other codes periodically for updating and recommending changes.

114.4 Violation penalties:

(1) Any person who shall violate a provision of this code or shall fail to comply with any of the requirements thereof or who shall erect, construct, alter, demolish or repair a building or structure in violation of an approved plan or directive of the building official, or of a permit or certificate issued under the provisions of this code, shall be guilty of a misdemeanor, punishable by fine of not more than five hundred ($500.00), or by imprisonment not exceeding one (1) year or both such fine and imprisonment. Each day that a violation continues shall be deemed a separate offense.

(2) Any person who demolishes a structure without first obtaining a permit to demolish the structure shall be punished by a fine of one dollar ($1.00) per gross above-ground square footage of the structure in addition to the penalties described in section 114.4(1).

(3) Any person who demolishes an historic resource, as defined in section 3303.7 without first obtaining a permit to demolish the structure shall be punished by a fine of two dollars ($2.00) per gross above-ground square footage of the structure in addition to the penalties described in section 114.4(1).

115.3 Unlawful continuance: Any person who shall continue any work in or about the structure after having been served with a stop-work order, except such work as that person is directed to perform to remove a violation or unsafe conditions, shall be liable to a fine of not less than one hundred dollars ($100.00) or more than one thousand dollars ($1,000.00).

305.2.3 Ten (10) or fewer children in a dwelling unit. A facility such as the above within a dwelling unit and having ten (10) or fewer unrelated children receiving such day care shall be classified as a Group R-3 occupancy or shall comply with the International Residential Code.

308.6.4 Ten (10) or fewer persons receiving care in a dwelling unit. A facility such as the above within a dwelling unit and having ten (10) or fewer unrelated persons receiving

custodial care shall be classified as a Group R-3 occupancy or shall comply with the International Residential Code.

903.2.1.2 Group A-2: Item 2. The fire area has an occupant load of two hundred (200) or more; or

907.2.3 Add Exception 4. An emergency voice/alarm communication system is not required in Group E occupancies with an occupant load of seventy-five (75) or less.

1011.2 Floor-level exit signs: Where required, illuminated exit signs in A1, A2, R-1 and R-2 use groups shall be placed above exit doors and to the side of exit doors eighteen (18) inches from the floor. The floor level exit signs shall be protected by a guard to prevent physical damage. This amendment shall not be retroactive in nature, and shall not apply to structures prior to January 1, 2007.

1103.2.3 - Change 907.9.1.2 to 907.5.2.3.2

1301.1.1 Criteria. Building shall be designed and constructed in accordance with the 2009 International Energy Conservation Code (IECC) with the following amendments to the 2009 IECC:

1. C101.4 Delete this section in its entirety.

1301.1.2: Use group R-2, R-3 and R-4 shall comply with this section or the requirements of International Energy Conservation Code. All buildings of Use Group R-2, R-3 and R-4 shall be insulated in accordance with the following:

BUILDING AREA AND REQUIRED INSULATION VALUE

Ceiling or roof -- R-38

Exterior wall -- R-15.5 for the assembly

Floor above unheated area or crawl space and ducts in ventilated attic or crawl space -- R-19

Walls separating one and two family dwellings from garage areas, walls facing ventilated attic spaces and finished exterior basement walls -- R-13

Ducts in unheated area not exposed to outside ventilation -- R-4

Joints in the building conditioned envelope that are sources of air leakage, such as around window and door frames, between wall cavities and window or door frames, between wall assemblies or their sill plates and foundations, between utility service penetrations through

the building envelope, shall be properly sealed with compatible and durable caulking, gasketing, weather-stripping or other materials in an approved manner. All exterior walls shall have a vapor retarder, capable of reducing vapor transmission to less than 1 perm, installed on the inside or the warm surface side of the insulated wall or ceiling. Only those ceilings that are attached directly to the underside of the roof rafters, such as flat roofs or cathedral ceilings, are required to install the vapor retarder. All windows shall have a maximum Thermal Transmittance (U) value of 0.55.

1604.1 General: Add the following to this paragraph: The following standard structural design criteria are established:

1. Roof Live Load, Minimum Unreduced = 20 psf.

2. Snow Load (Ground Snow Load) Pg = 20 psf.

3. Seismic Loading;

    a. Site class D, default site class per 1613.3.2.

    b. Mapped Spectral response accelerations.

        (1) Ss = 0.167 or per USGS data

        (2) S1 = 0.093 or per USGS data

1801.2 Design basis: Add the following to this paragraph: The following standard design criteria are established:

1. Foundation Frost Depth, Minimum = 30” (refer to 1809.5).

2. Presumptive net allowable foundation bearing pressure = 1500 psf (refer to 1803.1 and 1806.2). Note that section 1803.5.11 and section 1803.5.12 requires a geotechnical investigation if the structure has a seismic design category C, D, E or F.

3109.4 Residential swimming pools: Delete exception.

3109.4.1 Outdoor Private Swimming Pool: An outdoor private swimming pool, including an in-ground, aboveground or on-ground pool, hot tub or spa shall be provided with a barrier which shall comply with the following:

1. The top of the barrier shall be at least seventy-two (72) inches (1836 mm) above finished ground level measured on the side of the barrier which faces away from the swimming pool. The maximum vertical clearance between

finished ground level and the barrier shall be two (2) inches (51 mm) measured on the side of the barrier which faces away from the swimming pool. Where the top of the pool structure is above finished ground level, such as an aboveground pool, the barrier shall be at finished ground level, such as the pool structure, or shall be mounted on top of the pool structure. Where the barrier is mounted on the pool structure, the opening between the top surface of the pool structure, the opening between the top surface of the pool frame and the bottom to the barrier shall not allow passage of a four-inch (102 mm) diameter sphere.

Exception: For use groups R-3 and R-4 the top of the barrier shall be at least forty-eight (48) inches (1219 mm) above finished ground level measured on the side of the barrier which faces away from the swimming pool provided the swimming pool is equipped with a safety cover which complies with ASTMF 1346.91 (2003).

3201.3 Other laws: Add the following additional sentence to this paragraph: All encroachments by balconies into the public rights-of-way shall conform to the requirements of this chapter and the requirements of section 24-2(c) and section 29-26(c) of the code of ordinances.

3202.2.1 Steps: Delete

3202.3.3 Encroachments 15 feet or more above grade: Delete

3202.5 The regulations for awnings set forth in this code shall be modified for awnings on buildings within the boundaries of the Columbia Special Business District as follows:

(1) The following materials are prohibited:

Wood
Vinyl coated, high sheen cotton
Translucent vinyl

Opaque or semi-opaque awnings with back-lighted translucent graphics are permitted provided the graphics meet all sign requirements.

(2) Any valance on an awning shall not exceed a height of twelve (12) inches.

(3) Upper floor awnings should fit the height, width and shape of each window. Such awnings shall not be placed noticeably higher than the top of the window opening and trim. The bottom of the valance shall not extend lower than the midpoint of the window. Dome-type and curved awnings are only allowed on windows that have arched or curved openings. Upper floor

awnings shall not span multiple windows unless the distance between glazed openings is less than eighteen (18) inches.

(4) Stanchions or columns that support awnings, marquees and signs are prohibited.

(5) The lower edge of awnings on the ground floor shall be a minimum of eight (8) feet above the sidewalk and a maximum of ten (10) feet above the sidewalk.

(6) Awnings shall not extend into or occupy more than two-thirds of the width of the sidewalk measured from the building and shall not extend more than seven (7) feet from the building.

(7) Awnings in the Central Business District that were lawful conforming awnings on February 19, 2007 but that do not conform with the provisions of section 6-17 shall be allowed to remain in place indefinitely as lawful nonconforming uses.

(8) Awnings shall be properly maintained.

3303.4 Vacant lot: Where a structure has been demolished or removed, the vacant lot shall be filled, leveled and graded to provide proper drainage with no ponding of water. Commercial lots: Paved auto driveways and parking areas may remain provided they are in acceptable condition. Building excavations may be filled with clean fill or crushed stone. Parking on these areas is not permitted. Residential lots: Existing excavations are to be filled and graded to a mowable condition with all building materials, trash and debris removed. Adequate fill is to be placed for potential settling. The complete structure shall be removed which includes all slabs and foundations eighteen (18) inches below the pre-demolition finished grade, leaving the lot in a natural buildable condition without hazards, without ponding, and mowable. All accessory buildings are to be removed at the time of demolition of the primary structure. All lots without sufficient vegetative cover to prevent erosion from the site shall have erosion control measures installed at the final inspection.

3303.6 Utility connections: Before a structure can be demolished or removed, the owner or agent shall notify all utilities having service connections within the structure such as water, electric, gas, sewer, and other connections. A permit to demolish or remove shall not be issued until:

(1) A release is obtained from the utilities, stating that their respective service connections and appurtenant equipment, such as meters and regulators, have been removed or sealed and plugged in a safe manner; and

(2) A bond or other security deposited with the City in the amount of two thousand dollars ($2,000.00), guaranteeing that the building and debris are removed from the lot within ninety (90) days, the lot graded to comply with Section 3304 and required inspections are completed.

(3) Sewer laterals connecting the building to the City sewer system are to be cut and capped in an approved manner at or near the property line. The cap must be inspected prior to backfill of the excavation.

3303.8 Historic Preservation Commission review of demolition permits. An application for any permit that authorizes the demolition of an historic resource shall include notice of the application addressed to the Historic Preservation Commission. The notice shall be on a form provided by the building official. The building official, upon verification that the application is complete, shall promptly forward the notice to the Historic Preservation Commission in care of the Community Development Department. The building official shall not issue the permit authorizing the demolition until the lesser of thirty (30) calendar days after the notice has been sent to the Community Development Department or until the Historic Preservation Commission notifies the building official that the Commission has no objection to the immediate demolition of the structure. The thirty (30) day review period shall not begin until the application requesting demolition has been deemed to be complete.

The building official shall post notice of the proposed demolition in a conspicuous place facing each street abutting the property on which the structure to be demolished is located. The sign face shall be at least five square feet.

To allow for the thirty (30) day review period and no more than six (6) months to pass following notice to the public of the demolition, no more than seven (7) months shall elapse between making application for a demolition permit and the actual removal of a structure. Failure to remove an authorized structure within this timeframe shall require that a new application for demolition be filed."

The following definitions apply to this section:

“Demolition” means removal of more than twenty-five percent (25%) of the exterior wall or walls facing a public street or removal of fifty percent (50%) of all exterior walls.

“Historic resource” means any structure that

(1) Is fifty (50) years old or older; or

(2) Is located in an historic resources survey area; or

(3) Is within an actual or proposed National Register of Historic Places district; or

(4) Has been recognized or nominated by the Historic Preservation Commission as a “most notable property.”

Exceptions: The following shall not be subject to the provisions of this subsection:

(1) A building or structure that has been determined to be a public nuisance and dangerous to the health, safety, or general welfare under the Property Maintenance Code of Columbia, Missouri.

(2) A building or structure that the City, before December 1, 2008, has authorized to be demolished.

(3) Interior demolition.

(4) An accessory building or structure that is not contemporary with an historic resource.

(5) A building or structure for which the State Historic Preservation Office, Department of Natural Resources, has completed a Section 106 review and returned a finding of no historic significance.

(6) A building or structure that is subject to the certificate of appropriateness provisions of Sec. 29-21.4 of the Code of Ordinances, Columbia MO.

3401.5 Alternative compliance. Delete in its entirety.

3410.2 Permit to move: A permit to move a building or structure shall not be issued until a bond or other security is posted with the city in the amount of five thousand dollars ($5,000.00), guaranteeing that the building or structure will be made to comply with Section 3410.1 within 180 days from date of issuance of permit.

3410.3 Permit required to use public streets or right-of-way: No building or structure of any nature or description shall be moved over any street of the City of Columbia, Missouri, by any means whatsoever without first obtaining permission from the city manager. Upon receipt of an application for a permit, the city manager shall refer the same to the director of community development, who shall cause an inspection to be made to determine whether or not the building or structure is a public nuisance, as described in the Property Maintenance Code of Columbia, Missouri. Upon completion of the inspection, the director shall provide written findings to the city manager. At the same time the application for a permit is referred to the director of community development, the city manager shall direct the director of water and light to make an inspection of the route over which the building or structure is proposed to be moved, to determine whether or not any facilities of the water and light department could constitute an obstacle to such removal. Upon completion of the

inspection, the director of water and light shall provide written findings to the city manager. After giving consideration to the reports, and to any other matter involved in such removal which might concern the safety or welfare of the public, or public or private property, the city manager may grant or deny the application for permit.

3410.4 Not to stand on street longer than six hours: No buildings or structures shall be allowed to stand in the streets of the city in one block for a longer period than six (6) hours, except for the period between sunset and sunrise, when such buildings or structures shall have flares set about them on every side.

3410.5 Not to injure or take up pavement: No pavement shall be taken up or removed to assist in any way the moving of any building or structure, nor shall pegs, stakes, or poles be driven into paved streets for such purposes.

3410.6 Bond required: Before any permit shall be issued by the city manager, the applicant shall furnish a good and sufficient bond with a corporate surety company as surety to be approved by the city manager, in a sum to be fixed by the city manager at not less than double the estimated damages, conditioned that the applicant will promptly and fully pay the owner for any public or private property injured or destroyed by applicant in the process of moving such building, and that applicant will reimburse the city for costs and expenses incurred by the city in removing water and light department facility obstacles from the route and restoring the same.

3412.2 Applicability: Structures existing prior to January 1, 2002, in which there is work involving additions, alterations or changes of occupancy, shall be made to conform to the requirements of this section or the provisions of Sections 3403 through 3409.

The provisions in Sections 3412.2.1 through 3412.2.5 shall apply to existing occupancies that will continue to be, or are proposed to be, in Use Groups A, B, E, F, M, R, S and U. These provisions shall not apply to buildings with occupancies in Use Group H or I.

3412.3.1 Hazards: Where the building official determines that a structure is a public nuisance, as provided for in the Property Maintenance Code of Columbia, Missouri, such nuisance shall be abated in accordance with the Property Maintenance Code of Columbia, Missouri.

3412.3.2 Add the following: This section requires an existing building that is subjected to the evaluation scoring to process of 3412.6 to also comply with the existing building requirements of the IFC and IMPC. Those codes provide minimum requirements for health and safety that all existing buildings are expected to meet, regardless of whether there are any changes being made to the building or occupancy. Regardless of an existing building's final safety scores, the requirements of these referenced codes must be followed so occupants are safeguarded from hazards.

SECTION 2. The repeal of Article II of Chapter 6 of the Code of Ordinances, City of Columbia, Missouri, relating to the 2009 Edition of the International Building Code shall not affect any offense or act committed or done or any penalty or forfeiture incurred before the effective date of this ordinance.

SECTION 3. This ordinance shall be in full force and effect from and after October 1, 2013.

PASSED this _____ day of _____, 2013.

ATTEST:

_____ _____

City Clerk Mayor and Presiding Officer

APPROVED AS TO FORM:

_____

City Counselor

Source: Community Development - BSD

Agenda Item No:

To: City Council
From: City Manager and Staff

Council Meeting Date: Sep 3, 2013

Re: Update of Building Codes

EXECUTIVE SUMMARY:

The Building Construction Codes Commission has completed their review of the 2012 International Code Council Codes and 2011 National Electrical Code for adoption by the city. There are numerous minor changes and several major changes. The new codes provide clarity and enhance the life safety, protection of property, and energy efficiency of buildings. Among the major changes, the cost implications of the energy efficiency chapter of the residential code is the largest concern.

DISCUSSION:

Numerous meetings were held evaluating the effect of the new codes and determining what local addendums would be needed. These meetings were staffed by representatives of the Building and Site Development Division of the Community Development Department and the Fire Department.

Some of the most significant changes deal with the energy conservation requirements of the code. Staff has attached memorandums from both the BCCC and the Environment and Energy Commission (EEC). Members of the BCCC and EEC met to discuss the changes in the code. The BCCC brought forth their suggestions and the EEC agreed with all but three items. Staff supports the BCCC's recommendations on the basis that the codes are specifically designed to be minimum requirements. The EEC has made recommendations for higher standards on the broader basis of long term energy conservation.

The three differences between the BCCC and EEC recommendations are:

1. The amount of attic insulation.
2. The amount of wall insulation (changing from 2x4 framing to 2x6 framing).
3. Perimeter foundation insulation.

If the codes are to continue to be minimum standards, the recommendation of the BCCC should be adopted. Adopting the higher standards of insulation recommended by the EEC, on the other hand, would be in keeping with the City's commitment to conservation of energy resources. It is important that the new codes be adopted even if there is to be further consideration of the energy code requirements.

Below are some of the other significant changes and the BCCC's recommendations. Where no recommendations are listed, the BCCC is in favor of adopting the code as written:

International Residential Code:

1. Manufactured wood I-joists used in floor assemblies will be required to have ½" of gypsum board applied to the underside of the floor framing member. The new code requires a closer on the door between the residence and garage. The BCCC chose not to adopt this provision due to the inconvenience to the home owner.

2. Whole house mechanical ventilation is required (an exhaust fan running intermittently or continuously). The BCCC made provisions to add an exterior opening ducted to the return ductwork to provide additional natural ventilation in lieu of mechanical ventilation.
3. The BCCC has now defined that grass and landscaped areas are not walking surfaces therefore adjacent walls do not require guards.
4. A simplified wall bracing section has been added which is applicable to how homes are constructed in Columbia and will simplify construction and inspection of braced walls.
5. The 2012 code requires additional hold downs are required for long span rafters and trusses.
6. Continuous sidewall flashing is now acceptable in lieu of step flashing only.
7. The 2012 code requires a drip edge is now required at roofs.
8. The BCCC has amended the code so that the use of purple primer on waste and vent piping obviates the need for testing.
9. The BCCC decided to delete the requirement for Arc Fault Circuit Interrupters in one and two family dwellings.
10. The BCCC amended the requirement for sanitary sewer backwater valves that the waste piping does not need to be separated based on the flood rim of the fixture.
11. The BCCC has established a maximum number of receptacles based on the circuit breaker amperage. This simplifies the code requirements.
12. The supplemental electrode (additional grounding rod) requirement was deleted by the BCCC.

International Building Code:

1. The 2012 code more clearly defines different types of care facilities.
2. Children's structures (playgrounds) are more broadly regulated.
3. The area of furniture manufacturing and sales where a sprinkler system is required is now defined. The BCCC has accepted the code change and removed our current amendment.
4. Basements with walls or partitions must be sprinklered.
5. Educational occupancies are required to have an Emergency Voice/Alarm Communication System (EV/ACS). The BCCC recommended this requirement only apply to occupancies over 75 people.
6. Reduced exit widths are allowable for buildings equipped with EV/ACS.
7. Carbon monoxide alarms are now required in buildings with residential or institutional occupancies that have fuel burning appliances.
8. Exits may now be arranged to serve a portion of a story instead of the entire story.
9. Retained the reference to the 2009 International Energy Conservation code due to the complexity of the 2012 IECC and the fact that there is no software that meets the 2012 IECC requirements.
10. Firestop system third party inspections are now mandatory in risk category III or IV buildings.
11. No thermal barrier is required on the floor side of a structural insulated panel system floor.
12. Foam plastic meeting certain requirements may be used in plenums.
13. Toilet facilities are no longer required in parking garages.
14. Chapter 34 provisions take precedence over other codes. The BCCC has included an amendment which further clarifies which other codes are applicable.
15. The previous amendment regarding retaining walls has been removed as it is adequately addressed by the code book.

Other changes include the number of members for a quorum and the ability of alternates to sit on the commission for any absent member.

FISCAL IMPACT:

None.

VISION IMPACT:
http://www.gocolumbiamo.com/Council/Meetings/visionimpact.php

By adopting the 2012 ICC Codes, new homes will be more energy efficient.

SUGGESTED COUNCIL ACTIONS:

Passage of the ordinances.

FISCAL and VISION NOTES:					
City Fiscal Impact Enter all that apply		**Program Impact**		**Mandates**	
City's current net FY cost	$0.00	New Program/Agency?	No	Federal or State mandated?	No
Amount of funds already appropriated	$0.00	Duplicates/Epands an existing program?	No	**Vision Implementation impact**	
Amount of budget amendment needed	$0.00	Fiscal Impact on any local political subdivision?	No	Enter all that apply: Refer to Web site	
Estimated 2 year net costs:		**Resources Required**		Vision Impact?	Yes
One Time	$0.00	Requires add'l FTE Personnel?	No	Primary Vision, Strategy and/or Goal Item #	9.3.3
Operating/Ongoing	$0.00	Requires add'l facilities?	No	Secondary Vision, Strategy and/or Goal Item #	
		Requires add'l capital equipment?	No	Fiscal year implementation Task #	

Significant changes from the 2009 to 2012 IRC energy code:

Background:

The BCCC spent eight weeks reviewing the energy code portion of the IRC, far longer than they spent on any other portion of the code. During this period they sought the advice of several experts including:

Terry Freeman, Energy Services Supervisor, Water & Light
Fred Malicoat, P.E., Malicoat-Winslow Engineers (chairman of the BCCC)
Guy Ford, Missouri Insulation Supply
Dan Riepe, Home Performance Experts

The committee also reviewed the following documents:

- North Carolina 2012 Energy Code
- BCAP - Kansas City Residents Buying 2012 IECC Homes Will Save Thousands
- USDoE – Missouri Energy and Cost Savings
- BCAP - Illinois – Your Home, More Affordable with the 2012 IECC
- Alliance for Environmental Sustainability – Comparing IECC in Illinois to Above-Code Programs
- BCAP - Local Energy Code Action Kit for Municipalities in Missouri
- Texas A&M University Energy Systems Laboratory – A Comparison of Building Energy Code Stringency: 2009 IRC Versus 2012 IRC for Single-Family Residences in Texas
- Midwest Energy Efficiency Alliance – 2012 International Energy Conservation Code (Residential)
- Instructions for the Residential Building Data Collection Checklist 2012 IECC – Residential Provisions
- Carroll County Maryland – 2012 IECC Residential Energy Efficiency Code Requirement Flow Chart
- USDoE – Residential Code Change Proposals for the 2015 IECC
- Energy Efficient Codes Coalition – Estimate of Energy and Cost Savings from Proposed IECC Code Changes for 2012
- USDoE – Guide to the Changes between the 2009 and 2012 International Energy Conservation Code
- Testimony Regarding Montgomery County (MD) Department of Permitting Services Proposal to Adopt the 2012 International Residential and Energy Conservation Codes
- USDoE – Air Leakage Guide
- Association of Professional Energy Consultants – Measuring the Baseline Compliance Rate for Residential and Non-Residential Buildings in Illinois Against the 2009 International Energy Conservation Code
- BCAP – True Cost of the 2009 International Energy Conservation Code

The committee members who attended included:

John Page, Owner, J-Bar Construction
Fred Malicoat, P.E., Owner, Malicoat-Winslow Engineers
Kas Carlson, Owner, C&C Construction
Jay Creasy, Benchmark Testing and Inspections
Doug Muzzy, Owner, Muzzy Builders
David Weber, P.E., Allstate Consultants
Phil Clithero, Kliethermes Custom Homes
Dan McCray, McCray Builders

Others in regular attendance included:

David Forward, Chief Building Inspector, Boone County
Phil Teeple, P.E., Building Regulations Supervisor, City of Columbia
Stephen Adair, Building Inspector, City of Columbia
Shane Creech, P.E., Building and Site Development Manager, City of Columbia

General issues:

The 2012 code allows for a prescriptive based approach and a simulated performance alternative. In the discussions and based on the APEC report, the way to higher compliance is thru having an easy to understand prescriptive compliance option. The BCCC has drafted a one page section of a house that shows what insulation goes where and other important energy considerations. This is based on work done by North Carolina. When dealing with a large number of builders of various size and complexity, the KISS (keep it simple stupid) method should be adopted to achieve a high rate of compliance.

The simulated performance option will still be available however the APEC study showed that both the modelers and code officials did not properly perform or understand the modeling and there were substantial compliance problems.

The Department of Energy plans to achieve 50% better energy performance over the 2006 code by changing the energy code. They are limited to heating, cooling, water heating, and lighting. However they do not get to take credit for increased efficiency of the furnace or air conditioner as it is considered an appliance which falls under the NAECA. The DoE is mandating that furnaces be 90% efficient starting in March of 2013. They are currently required to be 78% efficient. This presents its own unique challenges to the building community. All of the studies reviewed by the committee were based on 78% efficient furnaces. The result of this is the magnitude of savings shown by some studies will be reduced by the required appliance changes.

Individual Changes

Wall Insulation requirements

The code requires R-20 or R-13+5 for exterior walls. Essentially for most builders this would mean 2x6 framing for exterior walls. BCAP estimates the increased framing cost for their model 2,400 ft^2 house at $1,404. This does not include additional costs for jamb extensions for windows and doors. The usable area of the home is also reduced. The Texas A&M study found that the increased wall insulation accounted for 3.3% energy savings above the 2009 code. The structural requirements should govern and it is the BCCC's opinion that at a minimum the wall cavity should be filled with insulation. High density batts are also available for 2x4 walls though they are more expensive (approximately 2.5x more expensive than R-13 batts).

BCCC recommendation: Walls must meet an R-20, R-13+5, or be completely filled with insulation. On a 2x4 wall, the minimum R-value shall be R-15.

Slab-on-grade floors

The 2012 code requires that for slab on grade floors a minimum of 2' of R-10 insulation be provided either interior or exterior, vertically or horizontally. The code says this insulation is not required in jurisdictions designated by the building official as having a very heavy termite infestation. The committee views adding this insulation as a route and place for termites to enter buildings and live. According to the IRC we are in the "moderate to heavy" termite infestation probability portion of the country.

BCCC recommendation: Exempt the requirement for slab-on-grade floor insulation unless it is a heated floor.

Air leakage

The 2012 code requires a blower door test on all new houses to determine the rate of air leakage. Based on testimony by Terry Freeman of the Columbia Water & Light Department and Dan Riepe of Home Performance Experts, the houses currently being constructed and blower door tested meet the code requirements of less than 3 air changes per hour. Texas A&M research found that meeting the air leakage requirements would provide the most substantial cost saving of any of the changes in the 2012 code. Mr. Freeman also stated that walls of current houses are often too tight to meet fresh air requirements. The other issue with blower door tests is that they are performed when construction is near completion and addressing flaws in the building envelope would be difficult and expensive. The test alone costs approximately $250.

BCCC recommendation: Ensure the building envelope is properly sealed at the insulation inspection. Allow the blower door test if a contractor does not agree with the building inspector as an option.

Mechanical ventilation

The proposed code requires mechanical ventilation but this is not mentioned in the Energy Efficiency chapter. It is specified in Section R303 – Light, Ventilation and Heating and is further specified in Section M1507 – Mechanical Ventilation. The code requires for a 1,500 square foot, 3 bedroom home, continuous exhaust of 45 CFM. This is 64,800 ft^3 per day, or for a house with 8' ceilings, 5.4 air changes per day. The report by the Montgomery County Energy and Air Quality Advisory Committee found that the code requirements for air leakage and mechanical ventilation are at odds with each other. Montgomery County, MD is a county of approximately 1 million residents. Two Illinois jurisdictions had concerns about this as well as stated in the APEC report. The tight envelope requires forced mechanical ventilation which increases energy use compared with the natural ventilation thru the walls. Terry Freeman made similar comments. The Montgomery County Energy and Air Quality Advisory Committee proposed to keep houses naturally ventilating. The BCCC has provided a middle of the road solution because they often see combustion air intakes filled with insulation and are also concerned that if there is a fan that runs continuously or intermittently, people could shut it off.

BCCC recommendation: Provide a duct from the return air to the outside. A 4" duct for houses < 1,500 ft^2, a 6" duct for houses < 2,400 ft^2, and an 8" duct for larger houses. The duct would be insulated to prevent condensation, contain a manual damper to adjust to the required amount of fresh air, and have a screen on the exterior to stop insects and animals.

Duct tightness

The adopted code requires testing if the duct is outside of the building's thermal envelope. Nemow Insulation has done a significant amount of duct testing in Columbia. When Phil Teeple contacted Nemow, they stated they had one failure in over 90 tests. Similar sentiments were echoed by Mr. Freeman and Mr. Riepe. Boone County requires the ducts to be sealed but not tested. Ducts which have been subsequently tested in Boone County have passed. The test costs $400.

BCCC recommendation: Allow a duct test if a contractor does not agree with the visual inspection performed by the building inspector.

Building cavities as ducts/plenums

The energy code does not allow building framing cavities to be used as ducts or plenums. The mechanical code still allows this. This would require all returns to be ducted. BCAP mentions this change but only caught the ducts in floor joists, and not the returns that go up the walls to the grills and estimated this would cost $172. Ducting the returns in the wall would add substantial costs above and beyond those BCAP figured.

BCCC recommendation: Amend the energy code to conform to the mechanical code.

Hot water pipe insulation

The code has a list of 9 different instances combined with a table with pipe diameter and run length to determine if hot water pipes should be insulated. Water use in homes is on an intermittent basis. The committee based on their experience with standard and recirculating water systems did not see value in insulating the hot water pipes due to the substantial increase in costs and minimal energy savings.

BCCC recommendation: Amend the energy code to remove the hot water pipe insulation requirement.

ENVIRONMENT & ENERGY COMMISSION

City of Columbia & County of Boone

City Hall, Conference Room 1A

January 17, 2013

Mayor McDavid and Council Members,

The Environment & Energy Commission has reviewed the 2012 Energy Code (Chapter 11 of the International Residential Code), and the recommendations of the Building Code Commission. The BCCC has done extensive research into the energy conservation sections of the residential code, and deserves recognition for this effort. The recommendations of the EEC are as follows:

Insulation of hot water piping: Along with BCCC, the EEC recommends eliminating hot water insulation requirements except in the case of hot water circulating pump piping.

Wood Frame Wall Insulation: The 2012 Energy Code requires R20 or R13+5 (R13 batt and R5 cladding). We agree with the BCCC that this new insulation requirement be kept in force. The Code also allows an overall U-Factor of 0.057, roughly equivalent to an average R-value of R17.5. As this can be achieved with a high-density R-15 batt in a standard 2X4 wall, we recommend that this be an allowable method as it meets the letter of the new code.

Termite Exemption for slab-on-grade and foundation insulation: We recommend that the Columbia jurisdiction continue to exempt houses from slab and foundation insulation requirements as this is a heavy termite infestation area, and these kinds of insulation can allow termites access to walls. This practice has a long history and is consistent with BCCC recommendations.

Cieling or Attic R-Value: The 2012 Code recommends an increase in Attic insulation from R-38 to R-49, and in the case of an "Energy Band" truss, R-38 is allowed. The EEC Recommends that this requirement, which may result in reduced mechanical equipment size if properly implemented, will be cost effective. Contractors using proper "Manual J" Calculations will reduce equipment size, thus reduce overall building cost and energy use compared to the old Code. This reduced HVAC

equipment size can directly reduce electric utility demand charges, reaping benefits to the City Utility as well as to the consumer. This is not in agreement with BCCC recommendations.

Air Leakage: The 2012 Code requires a blower door test on all new houses to determine air leakage. The EEC would agree with BCCC that a relaxed standard which requires a visual inspection of air leakage control measures during construction is feasible. The blower door test should be allowed as an option at the discretion of the Building Inspector in questionable or disputed cases.

Duct Leakage: The 2012 Code requires a duct pressure test on all new houses to determine duct leakage. Mechanical contractors are more aware of leakage requirements, and testimony shows they are taking care to seal ductwork. The EEC would agree with the BCCC that a relaxed standard which requires a visual inspection of duct leakage control measures during construction be allowed. The duct pressure test should be allowed as an option at the discretion of the Building Inspector in questionable or disputed cases.

Outdoor Air Duct: The EEC agrees with the BCCC recommendation of a single outside air duct, with insect screen and damper, routed to the furnace return air intake to satisfy Section R303 and M1507 Mechanical Ventilation requirements. This duct should be 4" for houses less than 1500 square feet, 6" for houses less than 2400 square feet, and 8" for larger houses. If there are multiple furnaces, the requirements may be applied to the area served by the furnace, or to one of the multiple furnaces as long as the furnace is properly sized to handle the additional heating or cooling load imposed by the outside air. The duct should be placed as to discharge into the return air filter, to reduce allergens or dust from outdoors.

Building Cavities as Return Air The EEC agrees with the BCCC that building cavities may be used as return air cavities without full duct lining, as long as leakage to outside air, attics, or unconditioned spaces is prevented by visually inspection.

High Efficacy Lamps: The EEC recommends that the 2012 requirement that 75 percent of the *lamps* in light fixtures be high efficacy type, be changed to read 75 percent of the *fixtures* be high efficacy. This allows a few multiple bulb fixtures, such as candelabras, to be conventional bulbs, while retaining the requirement for high efficacy bulbs in most areas. Previously the 2009 amendment changed *shall* to *should* in this paragraph.

Programmable Thermostats: The 2012 Code specifies that the initial heating setpoint shall be 70F and the cooling setpoint be 78F. The EEC recommends that this paragraph be changed from *shall* to *should,* which makes the requirement non-mandatory.

Respectfully Yours,

Karl Skala,

Chair

Environment and Energy Commission

RESIDENTIAL ENERGY CODE REQUIREMENTS DIAGRAM

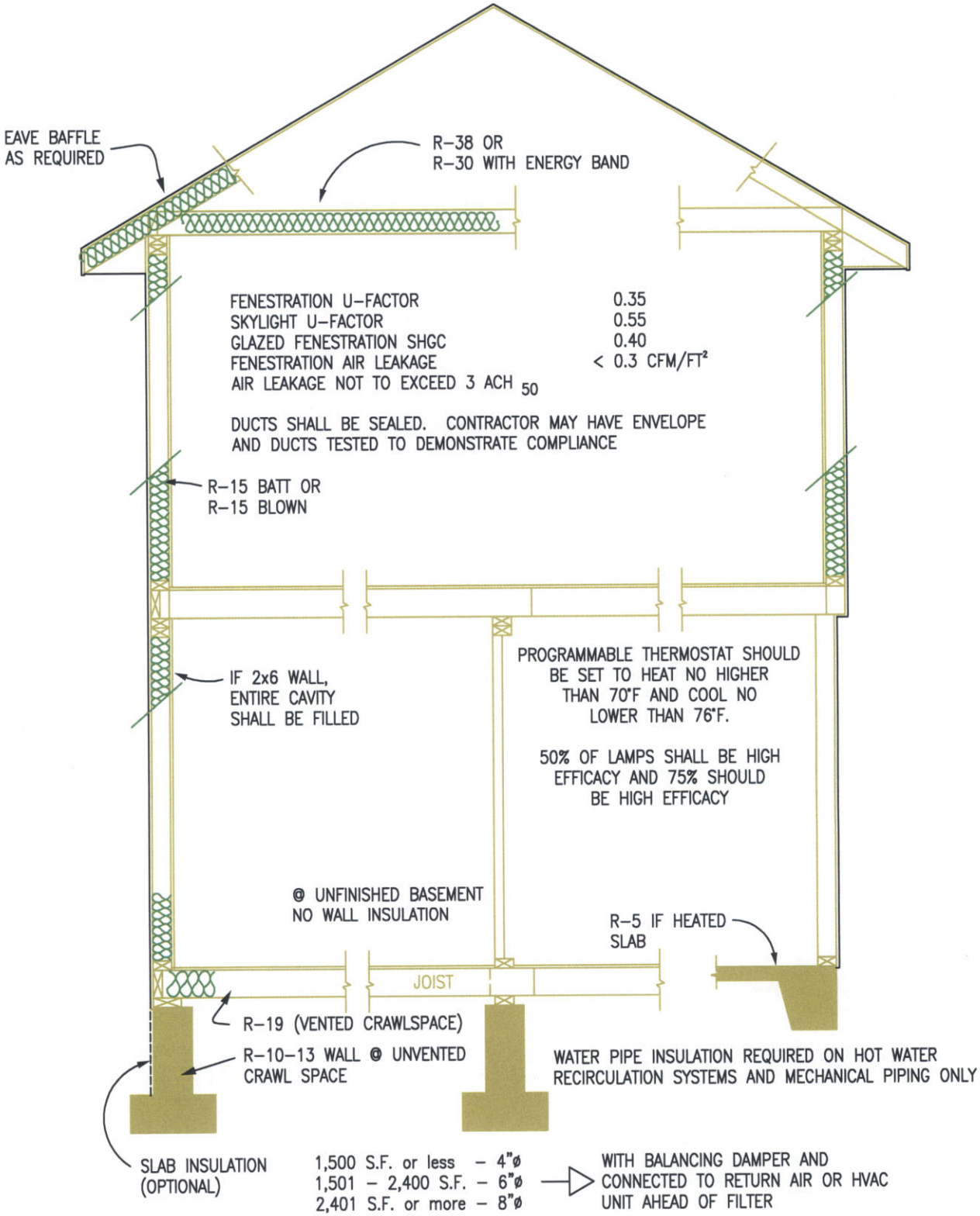

THIS SHEET IS NOT AN EXHAUSTIVE LIST. SEE IRC CHAPTER 11 FOR FULL REQUIREMENTS

ALTERNATIVE 1.1
Joist Perpendicular to Wall W/ Brick

2012 IRC

Section R404 Foundations and Retaining Walls
Section R404.1 Concrete and Masonry Foundation Walls

*This figure is provided as an example. This in not an all inclusive list of code requirements.

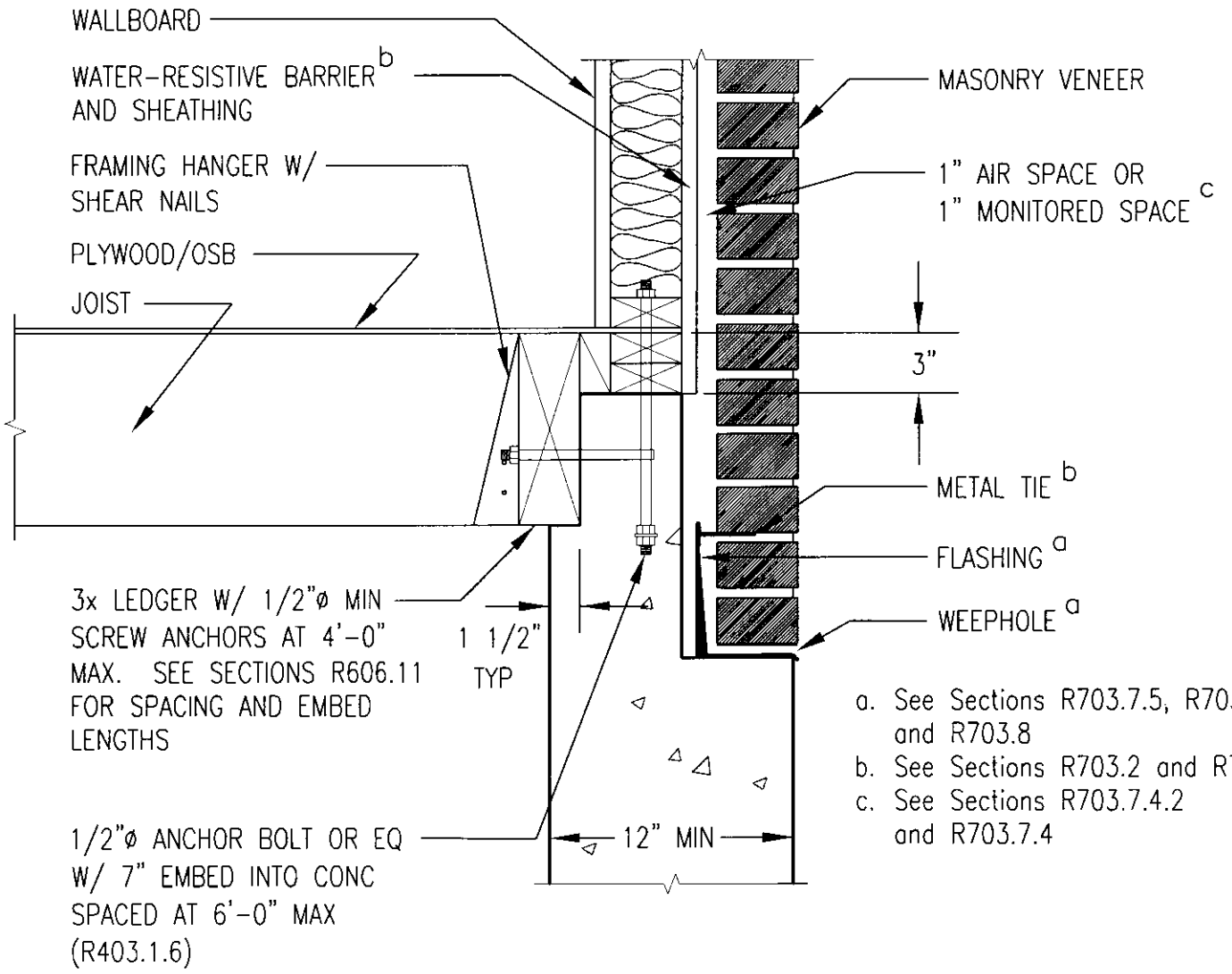

a. See Sections R703.7.5, R703.7.6 and R703.8
b. See Sections R703.2 and R703.7.4
c. See Sections R703.7.4.2 and R703.7.4

ALTERNATIVE 1.2

Joist Parallel to Wall W/ Brick

2012 IRC

Section R404 Foundations and Retaining Walls
Section R404.1 Concrete and Masonry Foundation Walls

*This figure is provided as an example. This in not an all inclusive list of code requirements.

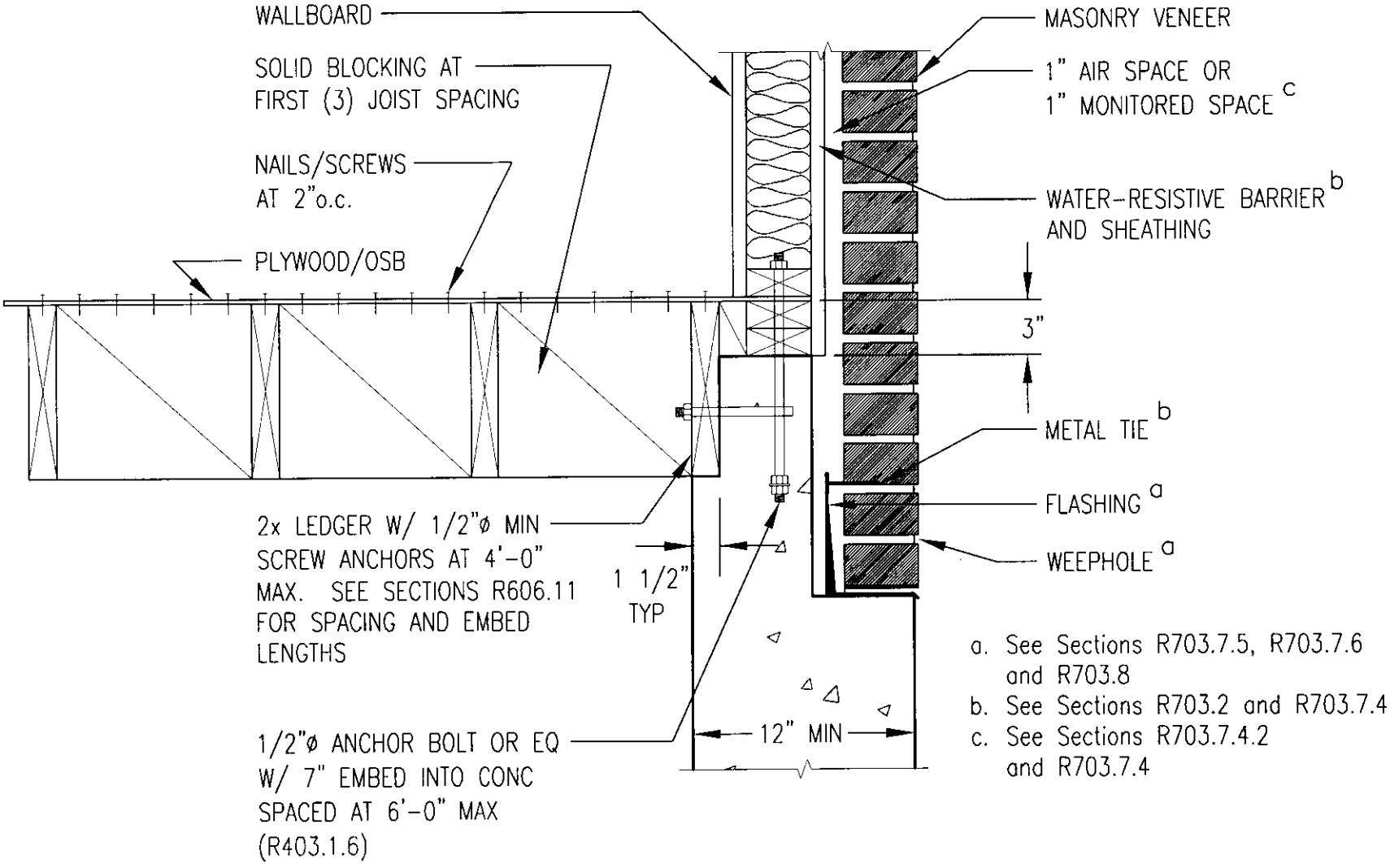

a. See Sections R703.7.5, R703.7.6 and R703.8
b. See Sections R703.2 and R703.7.4
c. See Sections R703.7.4.2 and R703.7.4

ALTERNATIVE 1.3

Joist Perpendicular to Wall W/O Brick

2012 IRC

Section R404 Foundations and Retaining Walls

Section R404.1 Concrete and Masonry Foundation Walls

* This figure is provided as an example. This in not an all inclusive list of code requirements.

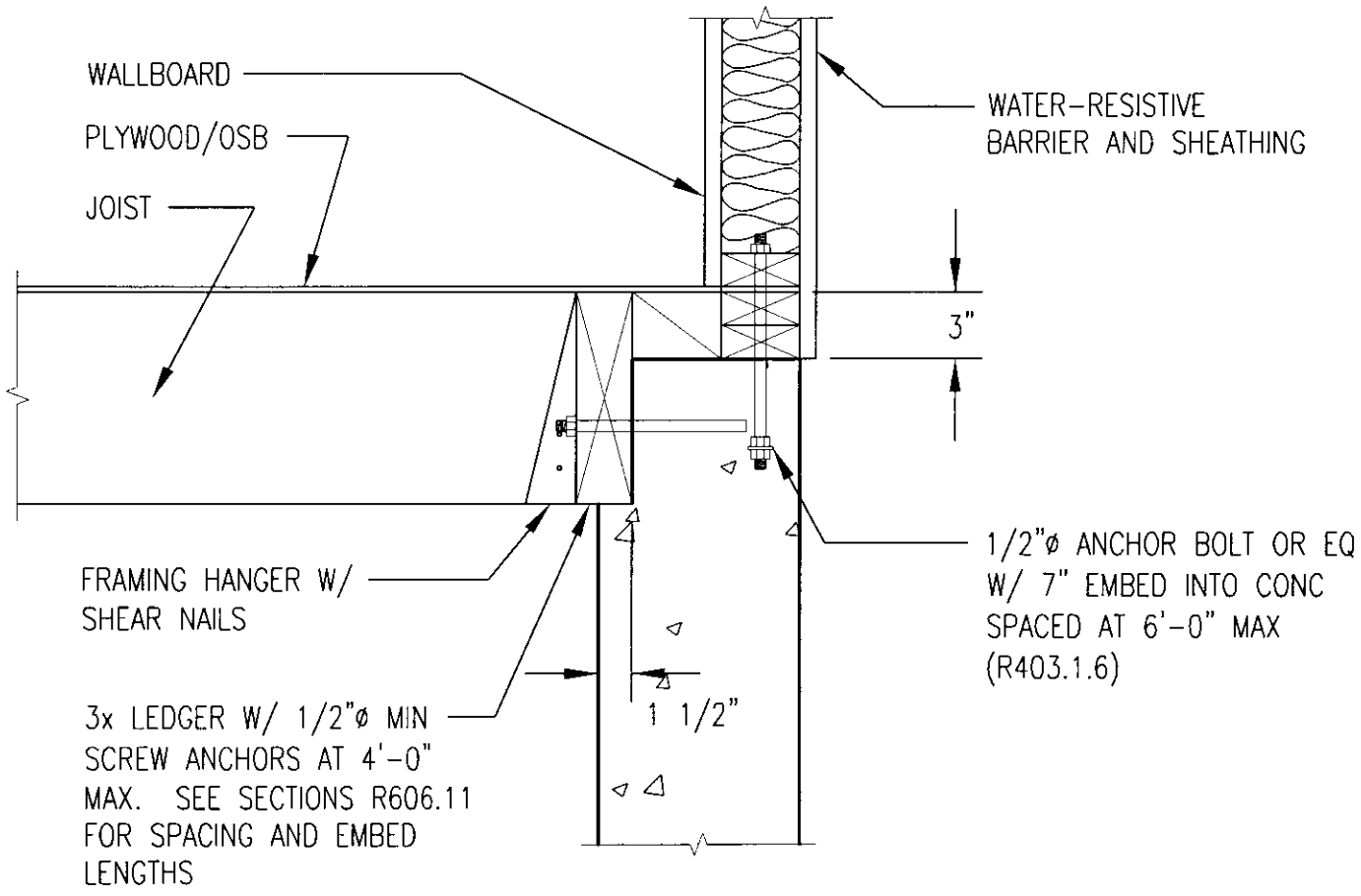

ALTERNATIVE 1.4

Joist Parallel to Wall W/O Brick

2012 IRC

Section R404 Foundations and Retaining Walls

Section R404.1 Concrete and Masonry Foundation Walls

* This figure is provided as an example. This in not an all inclusive list of code requirements.

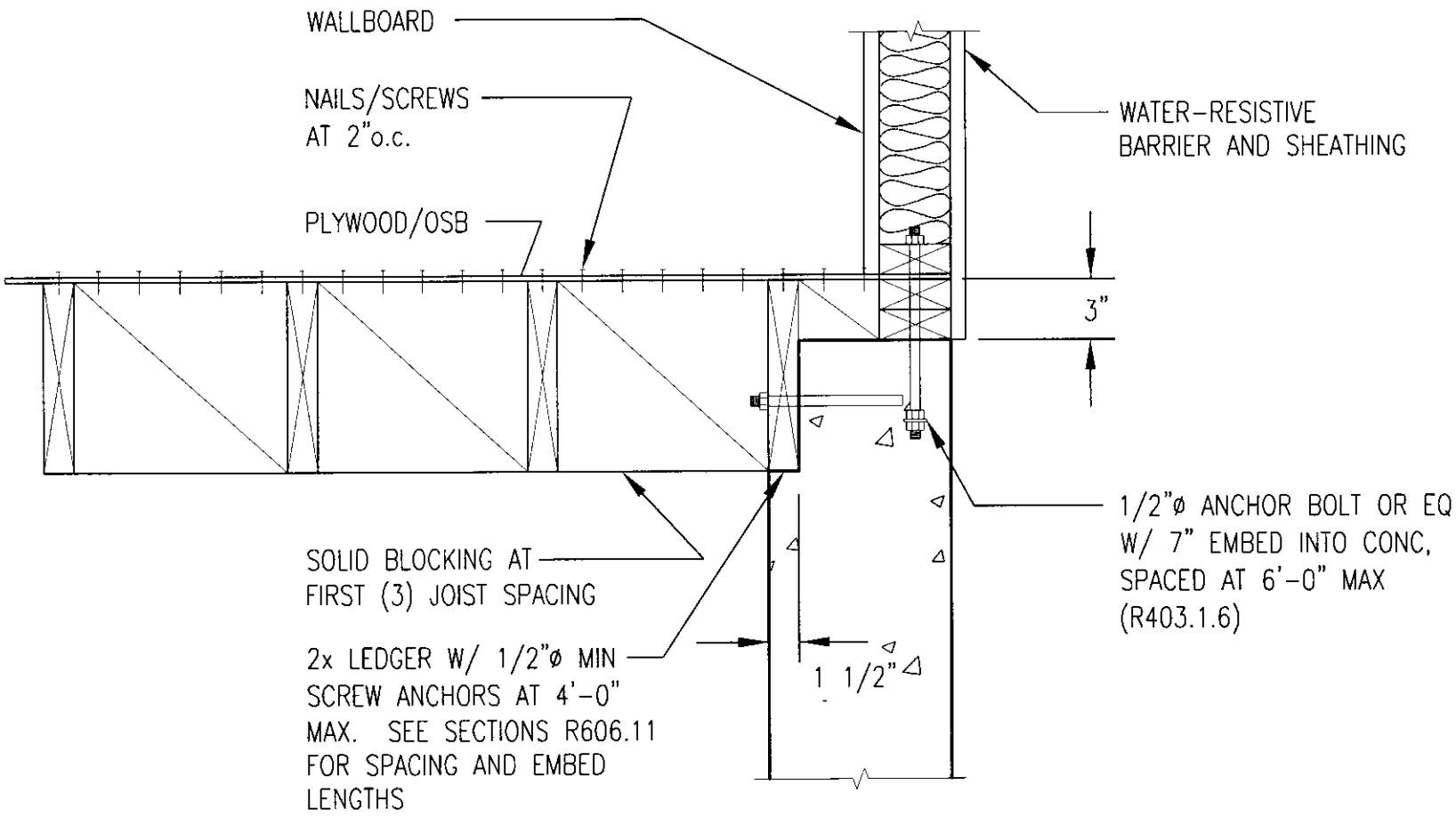

ALTERNATIVE 2.1

Joist Perpendicular to Wall

2012 IRC

Section R404 Foundations and Retaining Walls

Section R404.1 Concrete and Masonry Foundation Walls

* This figure is provided as an example. This in not an all inclusive list of code requirements.

NOTE A: Refer to the manufacturers tables for required spacing and placement of FWAZ wall angles

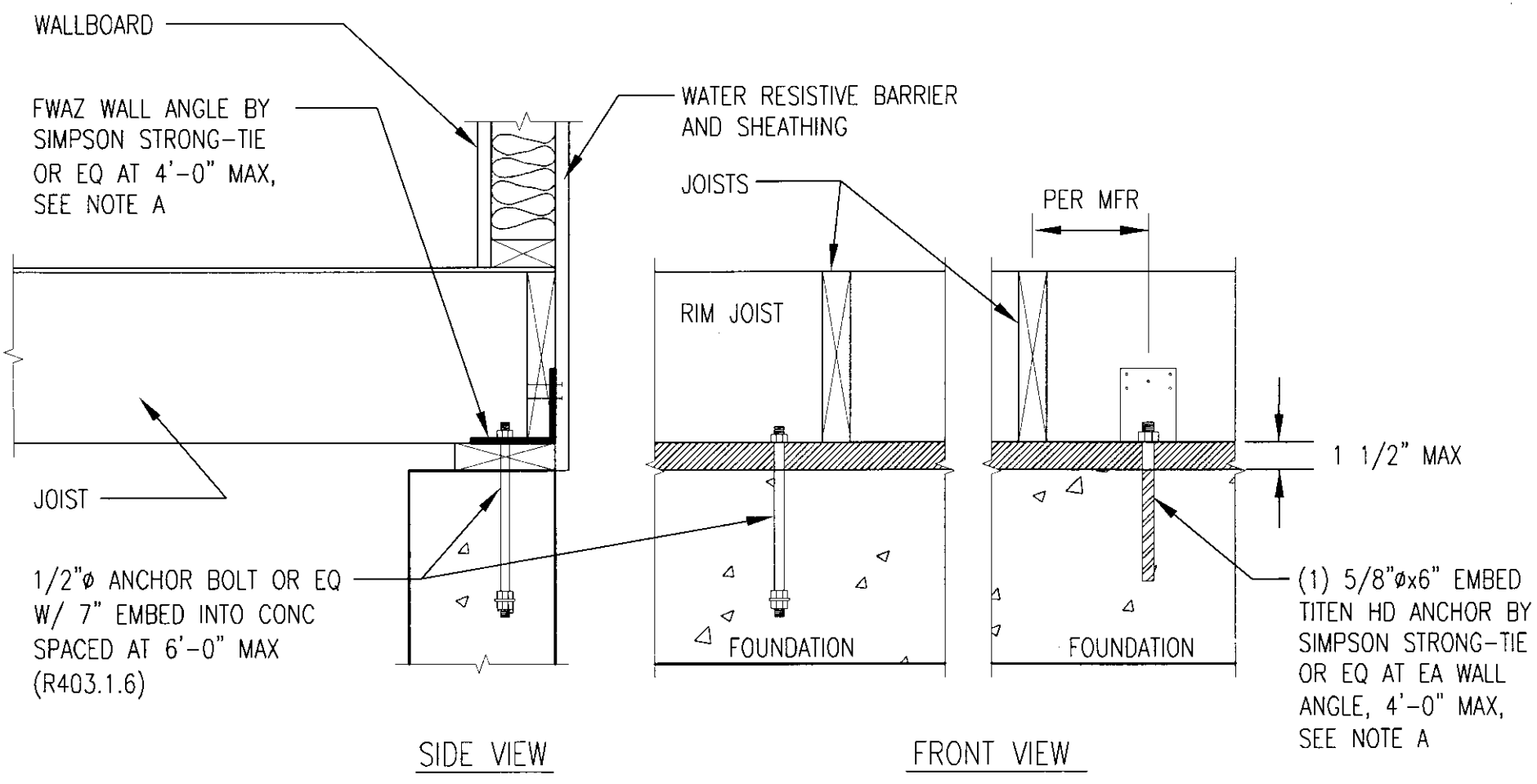

ALTERNATIVE 2.2

Joist Parallel to Wall

2012 IRC

Section R404 Foundations and Retaining Walls

Section R404.1 Concrete and Masonry Foundation Walls

* This figure is provided as an example. This in not an all inclusive list of code requirements.

NOTE A: Refer to the manufacturers tables for required spacing and placement of FWAZ wall angles

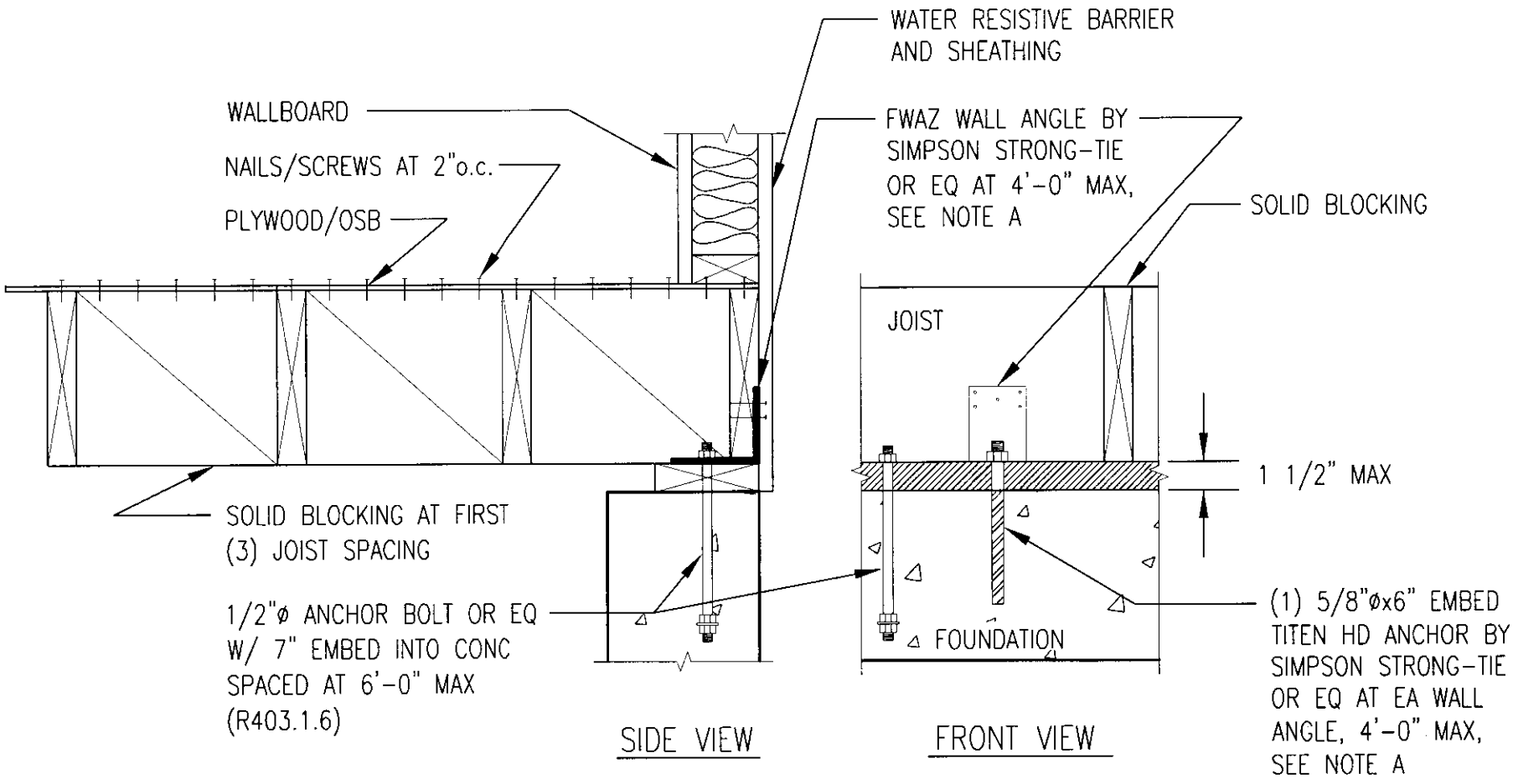

ALTERNATIVE 3.1

Joist Perpendicular to Wall W/O Brick

2012 IRC

Section R404 Foundations and Retaining Walls

Section R404.1 Concrete and Masonry Foundation Walls

* This figure is provided as an example. This in not an all inclusive list of code requirements.

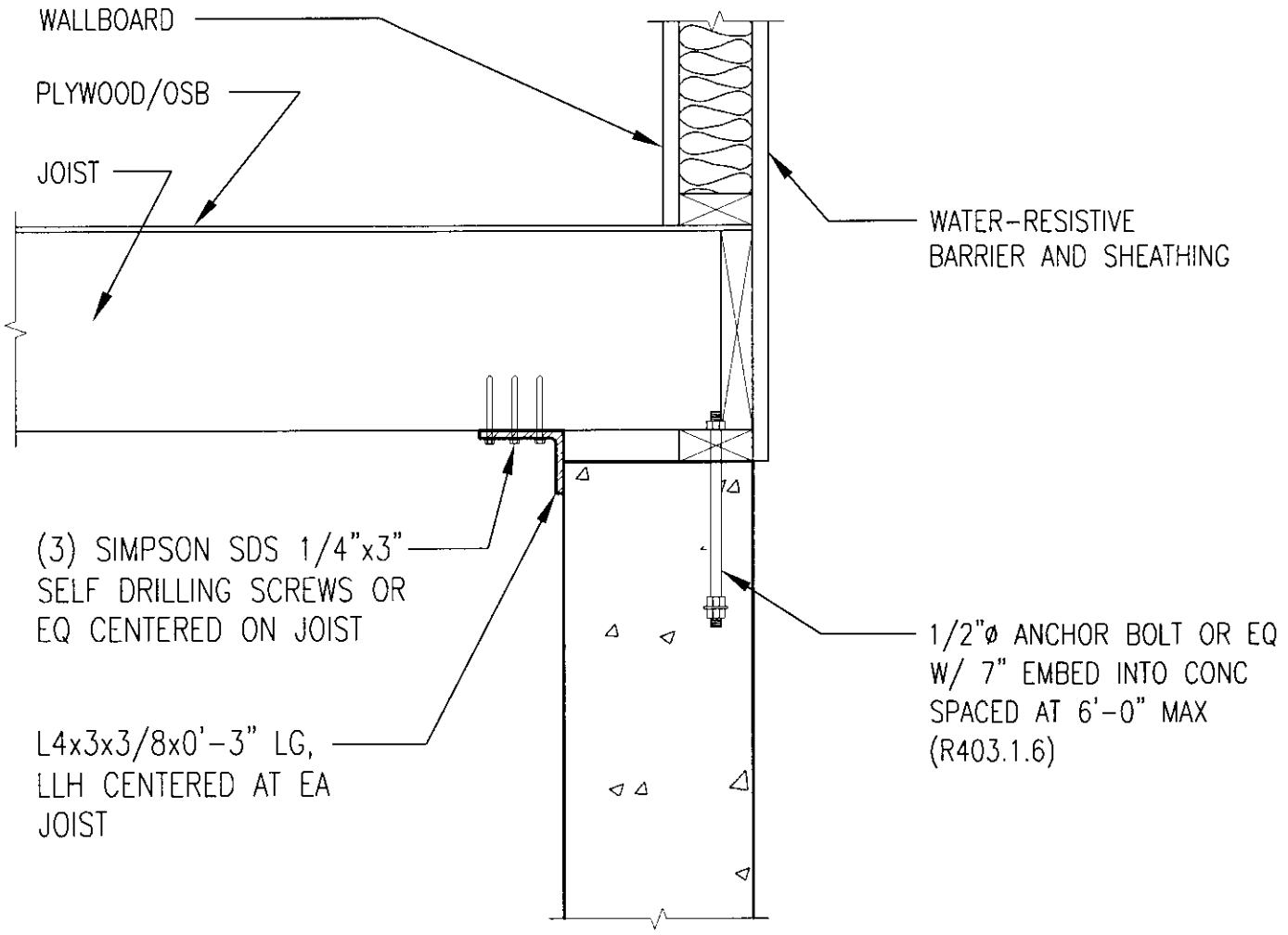

ALTERNATIVE 3.2

Joist Parallel to Wall W/O Brick

2012 IRC

Section R404 Foundations and Retaining Walls

Section R404.1 Concrete and Masonry Foundation Walls

* This figure is provided as an example. This in not an all inclusive list of code requirements.

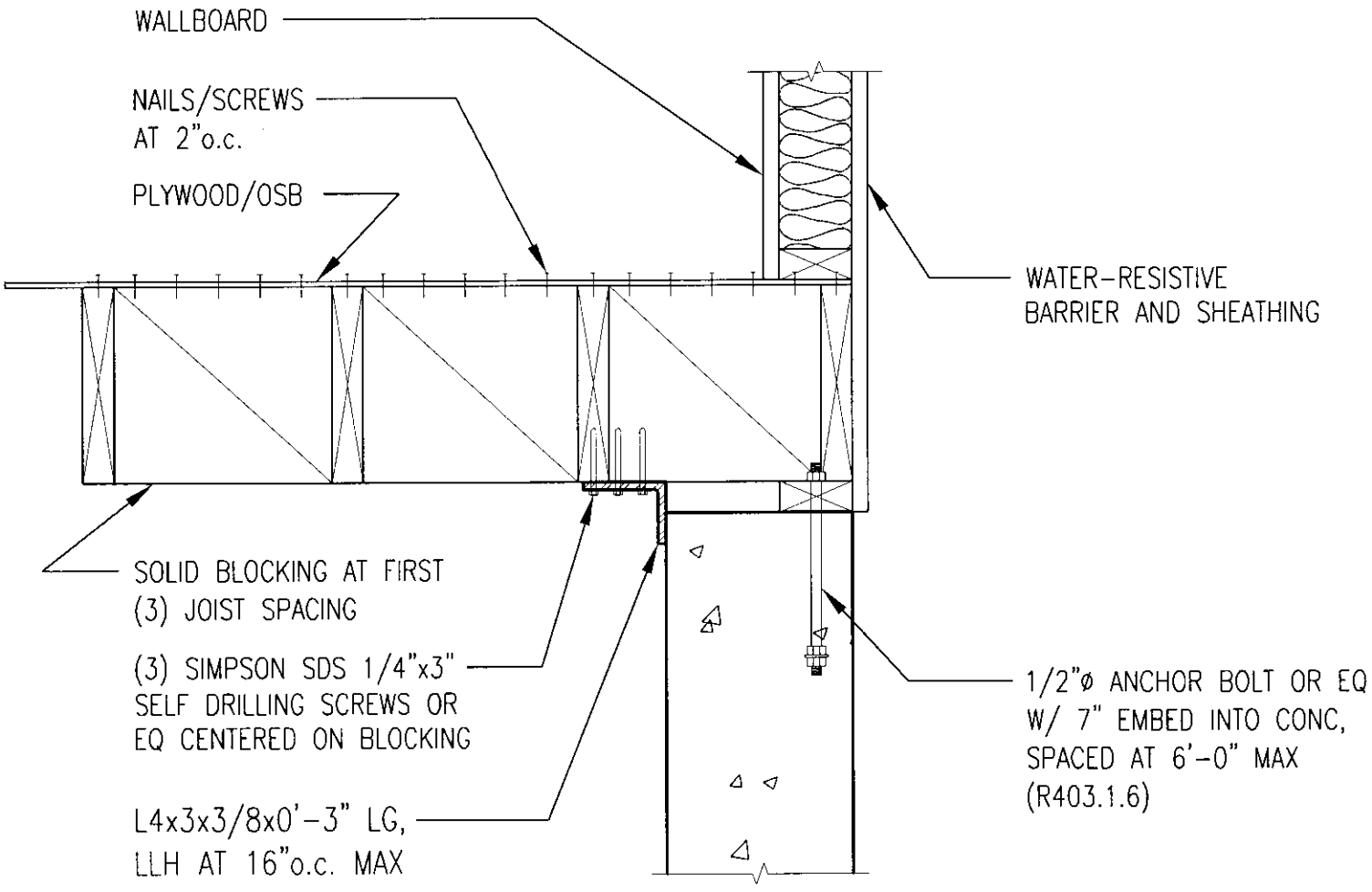

ALTERNATIVE 4

2012 IRC

Section R404 Foundations and Retaining Walls

Section R404.1 Concrete and Masonry Foundation Walls

* This figure is provided as an example. This in not an all inclusive list of code requirements.

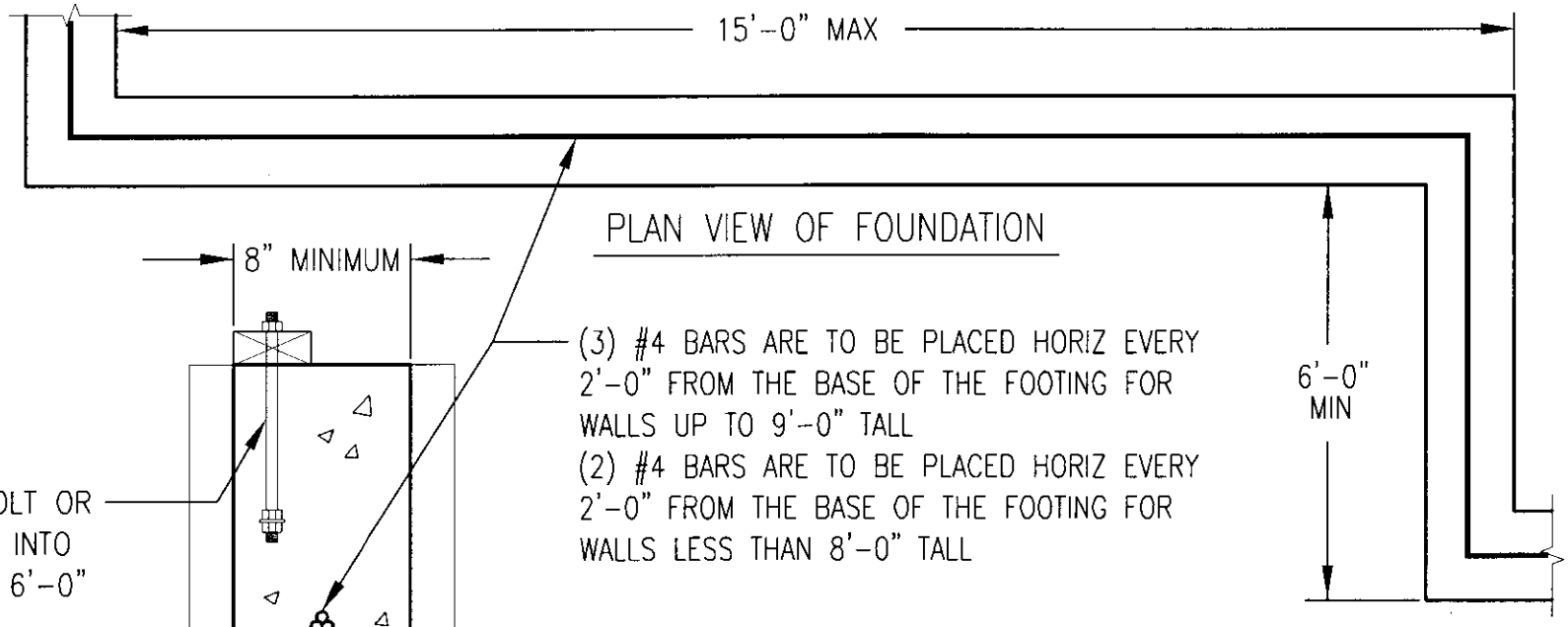

PLAN VIEW OF FOUNDATION

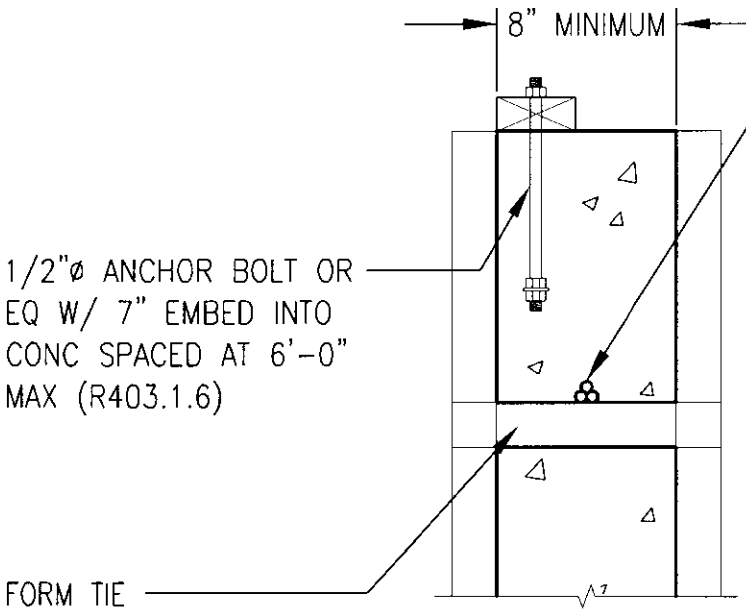

CROSS SECTION OF FOUNDATION WALL

(3) #4 BARS ARE TO BE PLACED HORIZ EVERY 2'-0" FROM THE BASE OF THE FOOTING FOR WALLS UP TO 9'-0" TALL

(2) #4 BARS ARE TO BE PLACED HORIZ EVERY 2'-0" FROM THE BASE OF THE FOOTING FOR WALLS LESS THAN 8'-0" TALL

NOTES:

1. (3) #4 BARS CAN BE REPLACED BY (1) #7
2. (2) #4 BARS CAN BE REPLACED BY (1) #6
3. MIN 48 BAR DIAMETER LAP SPLICES
4. GRADE 60 STEEL REINFORCEMENT

FOUNDATION DRAINAGE

FIGURE R405.1

2012 IRC

Section R405 Foundation Drainage

Section R406 Foundation Waterproofing and Dampproofing

* This figure is provided as an example. This in not an all inclusive list of code requirements.

** Either a filter fabric sock around draintile or filter fabric on the gravel shall be required, not both unless desired by the contractor.